Model			GWH18AGD-K6DNA1A	
Product Code			CB385001900	
Power Supply	Rated Voltage	V~	220-240	
	Rated Frequency	Hz	50	
	Phases		1	
Power Supply Mode			Outdoor	
Cooling Capacity		W	4600	
Heating Capacity		W	5200	
Cooling Power Input		W	1355	
Heating Power Input		W	1340	
Cooling Power Current		A	6	
Heating Power Current		A	5.8	
Rated Input		W	1800	
Rated Current		A	9	
Rated Heating Current		A	9	
Air Flow Volume(SS/H/MH/M/ML/L/SL)		m^3/h	910/850/780/740/700/650/610	
Dehumidifying Volume		L/h	1.4	
EER		W/W	3.39	
COP		W/W	3.88	
SEER		W/W	6.6	
SCOP(Average/Warmer/Colder)			4/5.1/-	
HSPF			/	
Application Area		m^2	23-34	
Indoor Unit	Indoor Unit Model		GWH18AGD-K6DNA1A/I	
	Indoor Unit Product Code		CB385N01900	
	Fan Type		Cross-flow	
	Diameter Length(DXL)	mm	Φ106X739	
	Fan Motor Cooling Speed(SS/H/MH/M/ML/L/SL)	r/min	1230/1050/980/900/850/800/750	
	Fan Motor Heating Speed(SS/H/MH/M/ML/L/SL)	r/min	1200/1050/980/900/850/800/750	
	Output of Fan Motor	W	35	
	Fan Motor RLA	A	0.45	
	Fan Motor Capacitor	μF	2.5	
	Input of Heater	W	/	
	Evaporator Form		Aluminum Fin-copper Tube	
	Pipe Diameter	mm	Φ5	
	Row-fin Gap	mm	2-1.3	
	Coil Length (LXDXW)	mm	745X22.8X342.9	
	Swing Motor Model		MP24BA/MP24AK/MP24HF	
	Output of Swing Motor	W	1.5/1.5 /1.5	
	Fuse	A	3.15	
	Sound Pressure Level(SS/H/MH/M/ML/L/SL)	dB (A)	Cooling:42/38/35/33/31/29/28 Heating:43/40/37/34/32/30/29	
	Sound Power Level(SS/H/MH/M/ML/L/SL)	dB (A)	Cooling:58/51/49/46/43/41/38 Heating:55/52/49/46/44/42/41	
	Dimension (WXHXD)	mm	982X311X221	
	Dimension of Carton Box (LXWXH)	mm	1039X377X287	
	Dimension of Package (LXWXH)	mm	1044X385X297	
	Net Weight	kg	13.5	
	Gross Weight	kg	16.5	

Outdoor Unit	Model of Outdoor Unit		GWH18AGD-K6DNA1A/O	
	Product Code of Outdoor Unit		CB385W01900	
	Compressor Manufacturer/Trademark		ZHUHAI LANDA COMPRESSOR CO., LTD	
	Compressor Model		QXF-A120zH190A	
	Compressor Oil		RB68EP	
	Compressor Type		Rotary	
	L.R.A.	A	18.00	
	Compressor RLA	A	5.00	
	Compressor Power Input	W	1096	
	Overload Protector		1NT11L-6233 or HPC115/95U1 or KSD115℃	
	Throttling Method		Capillary	
	Operation Temp	°C	16~30	
	Ambient Temp (Cooling)	°C	18~43	
	Ambient Temp (Heating)	°C	-15~24	
	Condenser Form		Aluminum Fin-copper Tube	
	Pipe Diameter	mm	Φ7	
	Rows-fin Gap	mm	2-1.4	
	Coil Length (LXDXW)	mm	742X38.1X550	
	Fan Motor Speed	rpm	900	
	Output of Fan Motor	W	30	
	Fan Motor RLA	A	0.40	
	Fan Motor Capacitor	μF	/	
	Air Flow Volume of Outdoor Unit	m^3/h	2200	
	Fan Type		Axial-flow	
	Fan Diameter	mm	Φ438	
	Defrosting Method		Automatic Defrosting	
	Climate Type		T1	
	Isolation		I	
	Moisture Protection		IPX4	
	Permissible Excessive Operating Pressure for the Discharge Side	MPa	4.3	
	Permissible Excessive Operating Pressure for the Suction Side	MPa	2.5	
	Sound Pressure Level (H/M/L)	dB (A)	52/-/-	
	Sound Power Level (H/M/L)	dB (A)	64/-/-	
	Dimension (WXHXD)	mm	848X596X320	
	Dimension of Carton Box (LXWXH)	mm	878X360X630	
	Dimension of Package (LXWXH)	mm	881X363X645	
	Net Weight	kg	33	
	Gross Weight	kg	36	
	Refrigerant		R32	
	Refrigerant Charge	kg	0.75	
Connection Pipe	Length	m	5	
	Gas Additional Charge	g/m	16	
	Outer Diameter Liquid Pipe	inch	1/4	
	Outer Diameter Gas Pipe	inch	3/8	
	Max Distance Height	m	10	
	Max Distance Length	m	25	
	Note: The connection pipe applies metric diameter.			

The above data is subject to change without notice; please refer to the nameplate of the unit.

2.2 Capacity Variation Ratio According to Temperature

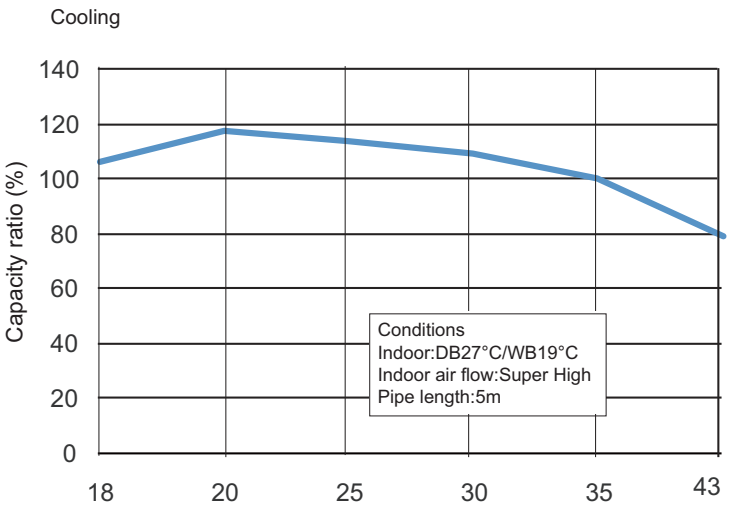

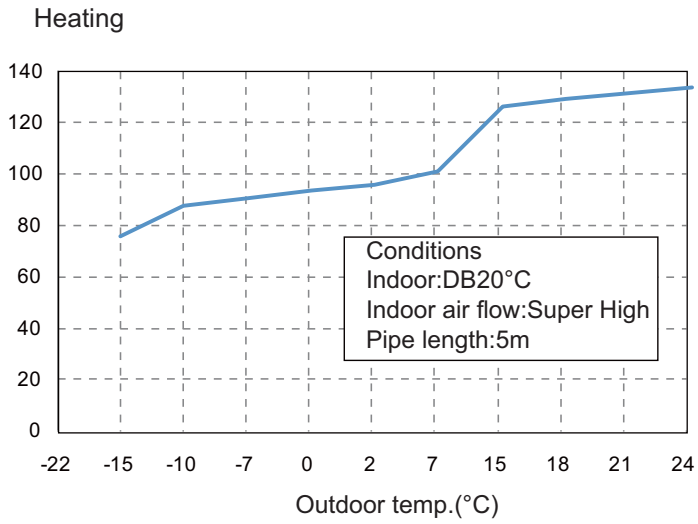

2.3 Cooling and Heating Data Sheet in Rated Frequency

Cooling:

Rated cooling condition(°C) (DB/WB)		Model	Pressure of gas pipe connecting indoor and outdoor unit	Inlet and outlet pipe temperature of heat exchanger		Fan speed of indoor unit	Fan speed of outdoor unit
Indoor	Outdoor		P (MPa)	T1 (°C)	T2 (°C)		
27/19	35/24	09K	0.8~1.1	12 to 15	65 to 38	TURBO	High
		12K		11 to 14	64 to 37		
		18K	0.9~1.1	12 to 14	75 to 37		
		24K	0.8 ~ 1.0	10 to 12	72 to 40		

Heating:

Rated cooling condition(°C) (DB/WB)		Model	Pressure of gas pipe connecting indoor and outdoor unit	Inlet and outlet pipe temperature of heat exchanger		Fan speed of indoor unit	Fan speed of outdoor unit
Indoor	Outdoor		P (MPa)	T1 (°C)	T2 (°C)		
20/-	7/6	09K	2.8~3.2	35 to 63	2 to 5	TURBO	High
		12K		35 to 65	2 to 5		
		18K	2.2~2.4	70 to 40	1 to 5		
		24K	2.2 t~ 2.4	70 to 40	1 to 5		

Instruction:

T1: Inlet and outlet pipe temperature of evaporator

T2: Inlet and outlet pipe temperature of condenser

P: Pressure at the side of big valve

Connection pipe length: 5 m.

3. Outline Dimension Diagram

3.1 Indoor Unit

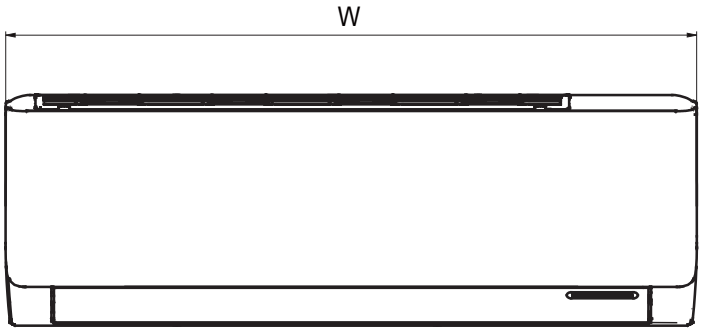

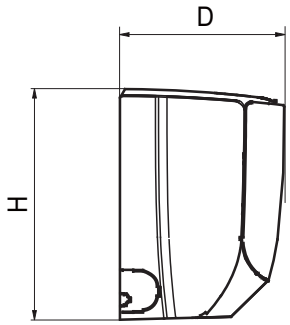

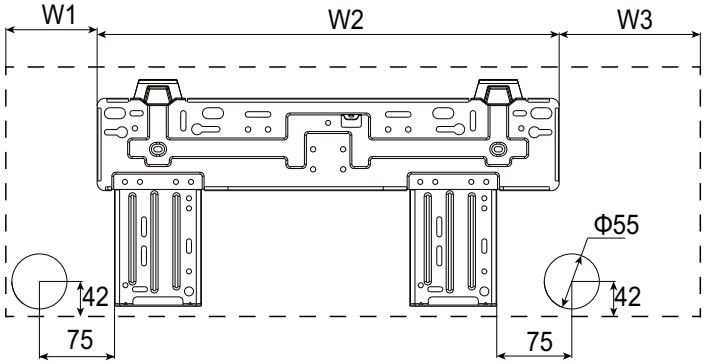

AGA/AGB

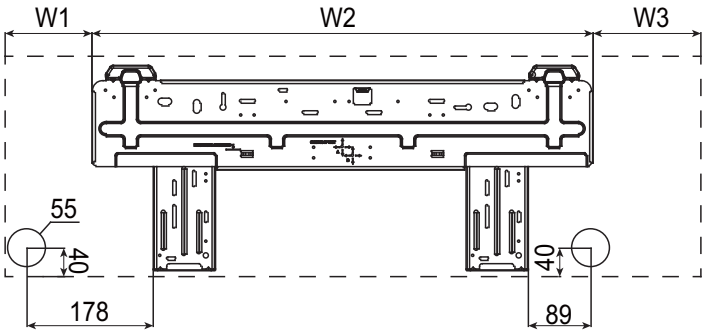

AGD

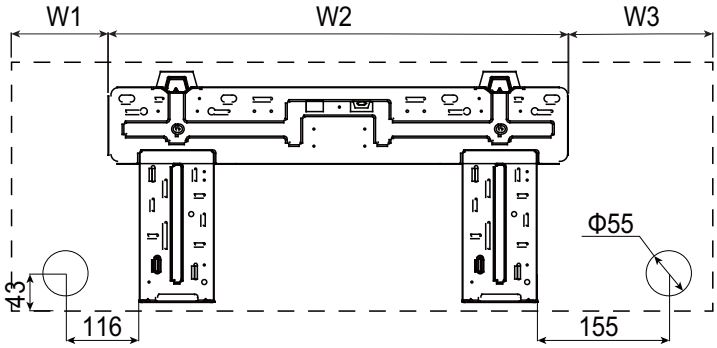

AGC

Unit:mm

Model	W	H	D	W1	W2	W3
AGA	704	260	185	93	462	149
AGB	779	260	185	133.5	462	183.5
AGC	825	293	196	113	542	170
AGD	982	311	221	122.5	707.5	152

3.2 Outdoor Unit

09/12K

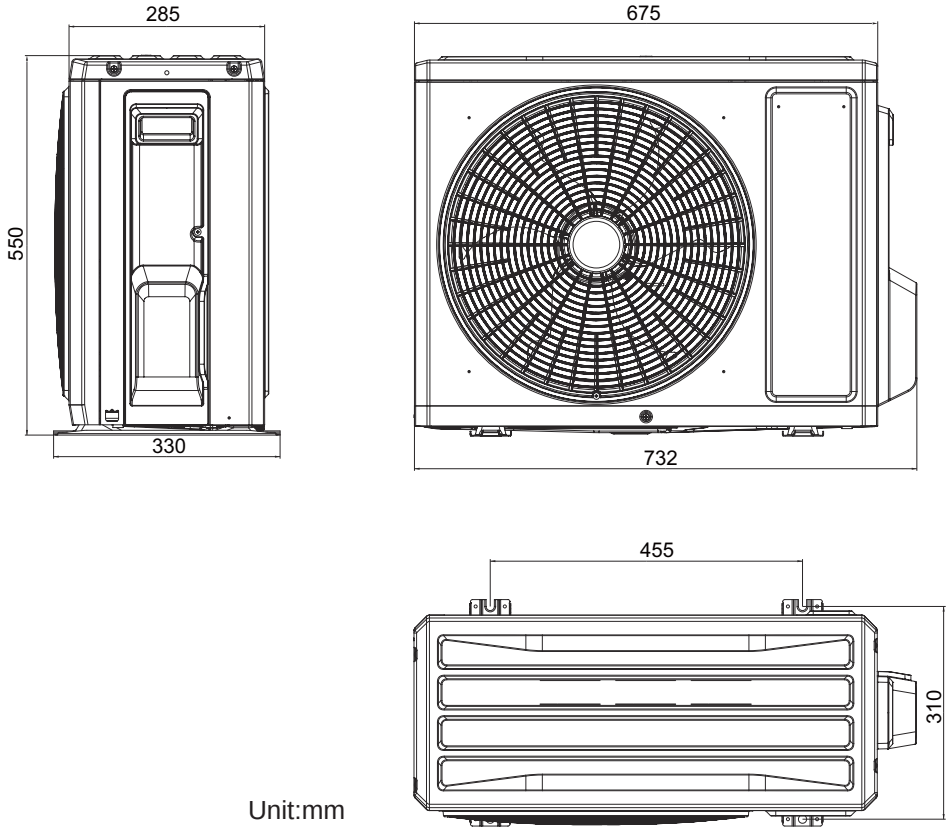

Unit:mm

18K

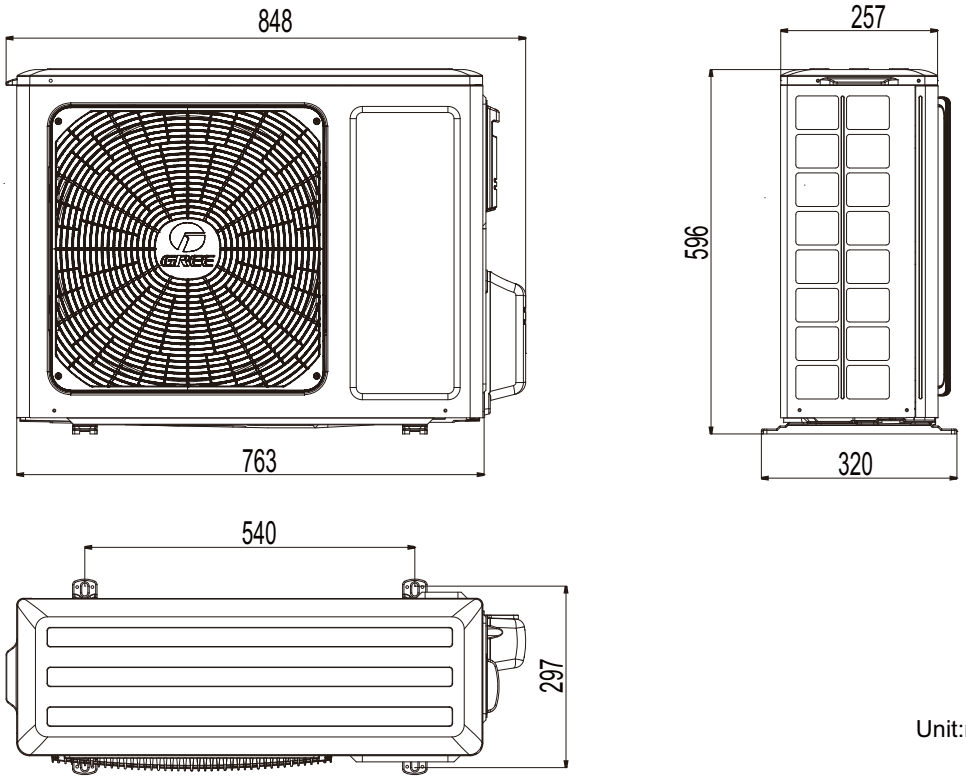

Unit:mm